AI Image Generation: Challenges in Attribute Control under Data Bias

GABRIEL MORAIS ALVES, SILVIA OLIVIO, PATRICIA GIORDANO

Context

- The rapid advancement of generative models has enabled high-quality image synthesis from text; however, these models often exhibit limitations related to reliability, bias, and control over specific attributes
- Real market demand: In e-commerce, sellers often need product images in different styles, colors, or environments. Instead of organizing expensive photoshoots, they can generate realistic product images directly from text descriptions. In marketing and design, companies need a constant stream of visual content (ads, banners, social media posts). Traditionally, this requires designers, time, and high cost. With text-to-image models, businesses can generate visuals instantly from simple descriptions
- Overall, the demand comes from the need to produce visual content faster, cheaper, and at scale

Context

- Natural interface: Instead of requiring technical skills with tools like Photoshop or 3D software, users can simply describe what they want using natural language
- More accessible (anyone can use it)
- More intuitive (no need for specialized training)
- Faster for iteration and experimentation
- Enable automation and massive scalability: an e-commerce platform can generate product images for every color variation. a marketing team can automatically create tailored ads for different audiences

Context Example

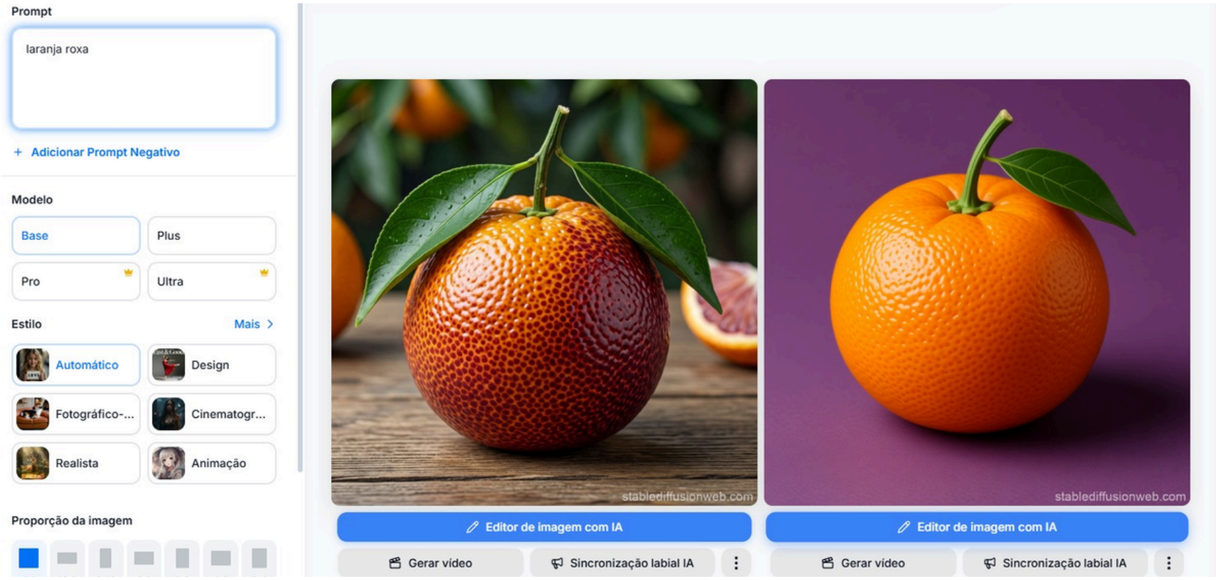

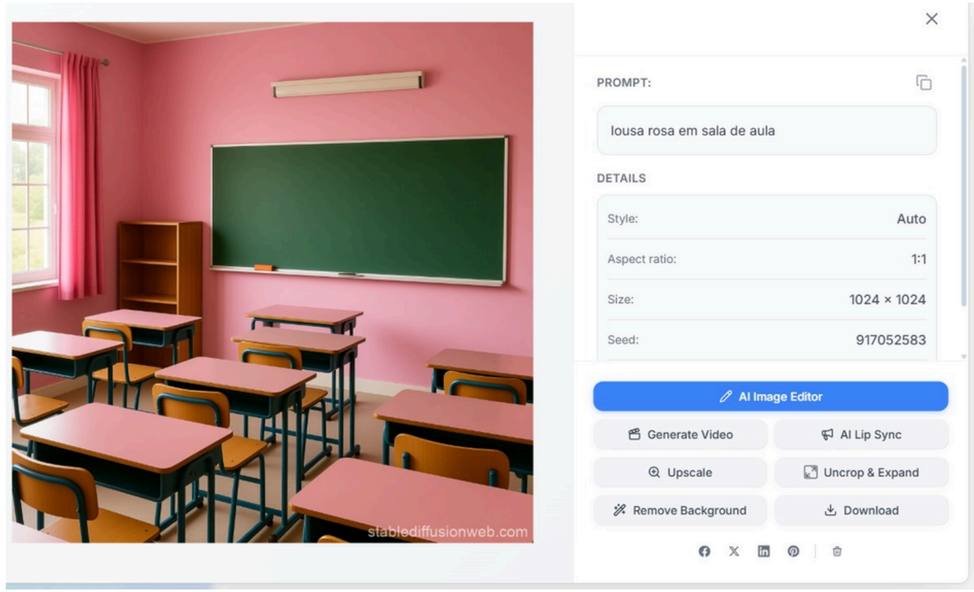

Objective

- Investigate how pre-trained open-source models, such as Stable Diffusion, handle prompts where there is a potential conflict between the user's input and the statistical patterns learned during training
- Evaluate whether the application of fine-tuning techniques to pre-trained open-source text-to-image generation models — such as Stable Diffusion — improves the fidelity in representing specific visual attributes, particularly color, with respect to the instructions provided in the prompt

Evaluation - Model generalization

Usage of quantitative and perceptual metrics:

- CLIP - measurement of similarity (prompt, image)
- Attribute Binding Evaluation
- VQA-based evaluation - usage of vision language model to answer questions and compare with expected results
- Human evaluation - realism and subtle failures
- Compositional benchmarks - success rate of correct binding

Model architecture

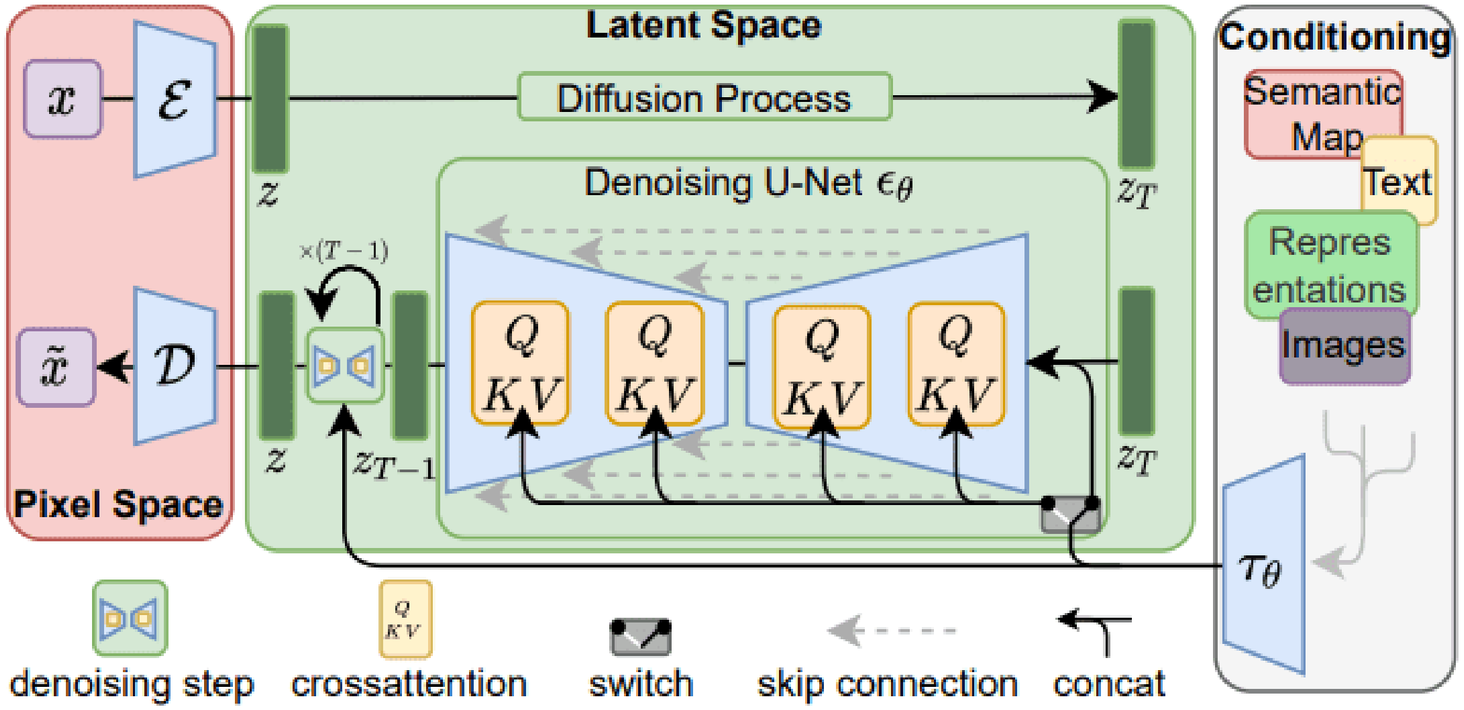

Dataset creation - methodology

- Objective: we do not want more images - we want to teach that certain attributes must be applied to the correct object and not to the entire context
- Diversity: baseline cases (regular cases) and modified cases → regular cases would be regular queries: “a classroom with a green chalkboard”, “an orange on a table”, etc. Modified cases are: “a pink chalkboard in a classroom”, “a purple orange on a table”, etc.
- ‘Pairs’ of prompt and the resulting image according to it
- Balanced dataset

Dataset example

"pink chalkboard"

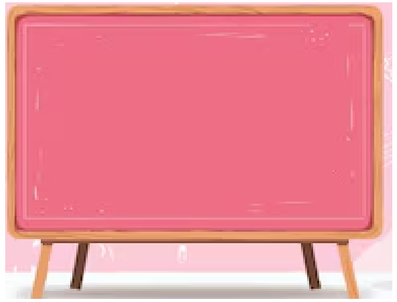

"a classroom with a green chalkboard"

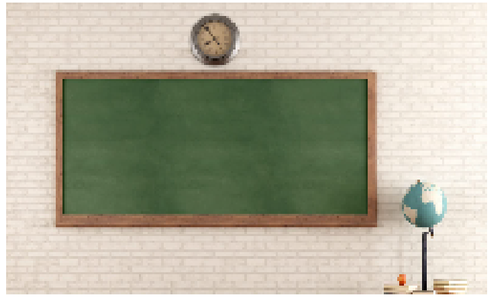

"pink classroom"

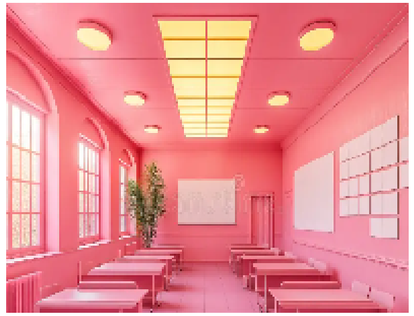

"an orange on a table"

References

Robin Rombach, Andreas Blattmann, Dominik Lorenz, Patrick Esser Bjorn Ommer,
High-Resolution Image Synthesis with Latent Diffusion Models, 13 April 2022

Jonathan Ho, Ajay Jain, Pieter Abbeel,
Denoising Diffusion Probabilistic Models, 6 Dec 2020

Alex Nichol, Prafulla Dhariwal, Aditya Ramesh, Pranav Shyam, Pamela Mishkin, Bob McGrew,
Ilya Sutskever Mark Chen,
GLIDE: Towards Photorealistic Image Generation and Editing with Text-Guided Diffusion Models

Thank you